© 2016 IJSRSET | Volume 2 | Issue 6 | Print ISSN: 2395-1990 | Online ISSN : 2394-4099
Themed Section: Engineering and Technology

Design and Fabrication of Cam Operated Coveyor for Spherical Components Transporation

Prasanna*[1], Sharanabasappa[2], Vishwanath B R[3], Kishore[4]

*[1,3,4]Assistant Professor, Department of Mechanical Engineering, Don Bosco Institute of Technology, Bengaluru, Karnataka, India
[2] Lecturer, Department of Mechanical Engineering, Samara University, Samara, Ethiopia

ABSTRACT

In large scale production industries, product manufacturing is carried out at different work stations and semi-processed products need to be transferred from one work station to another. We normally observe in many production units that semi-processed products are transferred from one work station to another using various mechanisms. Roller mechanisms and Bucket conveyors fulfil the need but consumes large amount of energy and requires more space. So there is necessity of a mechanism which fulfils this need effectively and more economically. In this present work cam operated conveyor which is suitable for holding spherical components is designed and fabricated. Conveyor consists of cam mechanism with a lift of 50mm the components are transferred to each work stations with help of cam mechanism. It is observed that this mechanism is suitable for transferring spherical components from one workstation to another without any slippage of components.

Keywords: Spherical products, Cam, Conveyors, Transfer, Material Handling Equipment

I. INTRODUCTION

In production industries product manufacturing is carried out at different work stations and hence the semi-processed products need to be transferred from one work station to another. Even though there are mechanisms available but they have disadvantages like more power and space consumption, slow action etc. So there is necessity of a mechanism which fulfils this need effectively and more economically. There are certain shapes components which cannot be used by the conventional mechanisms due to their low efficiency [1], not economical and most importantly slipping of product from the conveyor. One of the examples of such components is spherical shaped components.

In present technology there are several mechanisms and machines are used to convey the semi processed product inside the plant. There are many conventional mechanisms such as belt conveyor, screw conveyor, roller conveyor, bucket conveyor etc. [2] For different shapes and size of the components above mentioned mechanisms are used.

1.1 Types of conveyors:

There are many types of conveyors are used for different applications. Some of the important conveyors are listed below.

1. Roller conveyor

Figure 1. Roller conveyor

The roller is more efficient conveyor of any kind of industry. The load bearing capacity of roller conveyor

is good. The product transportation takes place by sliding and slipping. This is most preferred to transfer rigid products, solid blocks, boxes, packed bottle etc, but it fails to convey spherical components.

2. Belt conveyor

Figure 1.2. Belt conveyor

The belt conveyor is used to convey materials like coal, ash, soil, row iron etc. It is suitable for long length transport inside the plant. It conveys material up to 400 meters.

The main disadvantage is high maintenance cost, when belt breaks, have to replace with new one and noise is high.

3. Screw conveyor

Figure 1.3 Screw conveyor

The screw conveyor is only used to convey materials like minerals, soil etc., [3]

Therefore this design and fabrication of conveyor for spherical product is introduced, component used in this mechanism are very simple such as cams, shaft, base plate, side plate, wood blocks and bearings. Here cams are designed on the bases of SHM (simple harmonic motion) and the dimensions of the cams are directly proportional to height which the product has to be lifted. There are six wood block to transfer product from lower end to higher end which reciprocates as the cam revolve along with shaft. Then the semi processed product or fully processed product slide over the wood block which are slant in nature leaning towards the higher end, this slant nature help the product to transfer for lower end to higher end.

II. METHODS AND MATERIAL

A. Design and Modelling Of Cam Operated Coveyor

2.1 Cam Design

A Cam makes a higher kinematic pair with follower. Cam mechanisms are widely used because with them, different types of motion can be possible. Cams can provide unusual and irregular motions that may be impossible with the other types of mechanisms [4].

However, the manufacturing of cams is expensive and the wear effect due to the contact stresses is a disadvantage. On the other hand, cams are not proper for the systems with high speeds and heavy loads.

A cam is a mechanical device used to transmit motion to a follower by direct contact. The driver is called the cam and the driven member is called the follower. In a cam follower pair, the cam normally rotates while the follower may translate or oscillate. A familiar example is the camshaft of an automobile engine, where the cams drive the push rods (the followers) to open and close the valves in synchronization with the motion of the pistons.

2.2 Cam nomenclature

Cam Profile : The contour of the working surface of the cam.
Tracer point: The point at the knife edge of a follower or the centre of a roller or the centre of a spherical face.
Pitch Curve: The path of the tracer point.
Base circle: The smallest circle drawn tangential to the cam profile with its centre on the axis of the camshaft. The size of the base circle determines the size of the cam.
Prime circle: The smallest circle drawn, tangential to

the pitch curve, with its centre on the axis of the camshaft.

Pressure Angle: The angle between the normal to the pitch curve and the direction of motion of the follower at the point of contact [5]

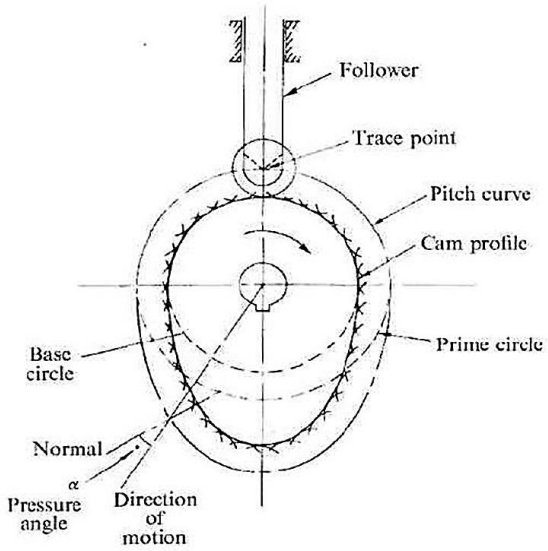

Figure 2.2. Cam nomenclature

The conveyor is design on the basis of cam, which has lift of 50mm and simple harmonic motion. While the base diameter is 80mm and the follower is 20mm.

When the cam is active follower moves upwards and when inactive it comes downwards, in the dwell period follower will be constant. There are guide ways to guide the follower on the cam; follower is connected to the box which has incline surface leaning towards the higher end. Spherical products slides from one box to another and moves to higher end without slipping backward. Boxes are assigned with side support so that the product should not slip out side.[6]

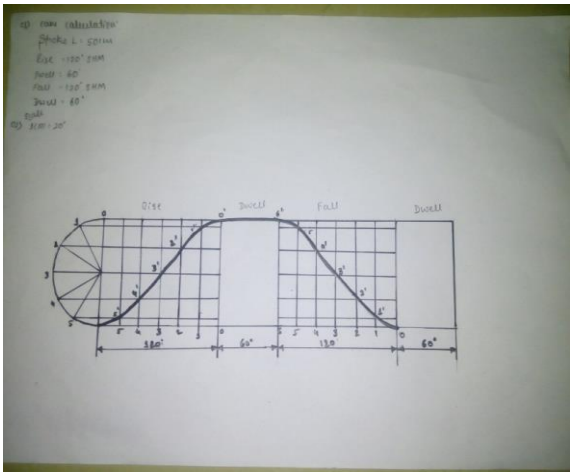

Figure 2.3. Displacement diagram

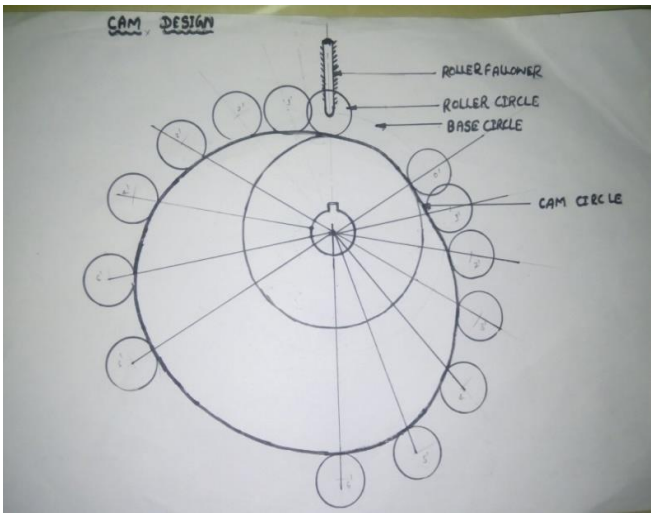

Figure 2.4. Cam profile

2.3 Conveyor components design and modelling:
Conveyor components are modelled using NX-UG software.

2.3.1 Cam mounted shaft

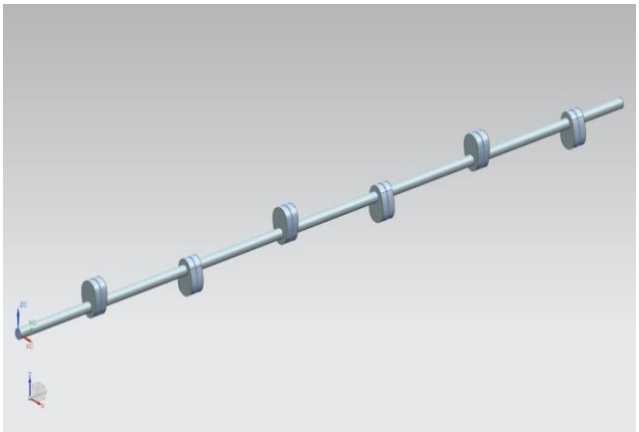

Figure 2.3.1. Cam mounted on shaft

Cam shaft of steel material having a diameter of 20mm is considered for the mounting of cams. Shaft is mounted with six cams which are of same dimension. Base diameter is of 80mm with 50mm lift. Motion of the cams has been designed on the basis of SHM (simple harmonic motion).

2.3.2 Cam Follower

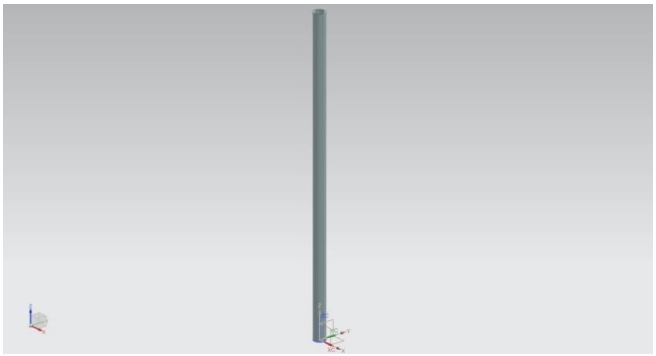

Figure 2.3.2 Cam follower

Cam follower is main part of this assembly, which follows the cam profile; followers are of different dimension such as 525,550,575,600,625 and 650. Every cam follower size is increased by 25mm.

2.3.3. Work station

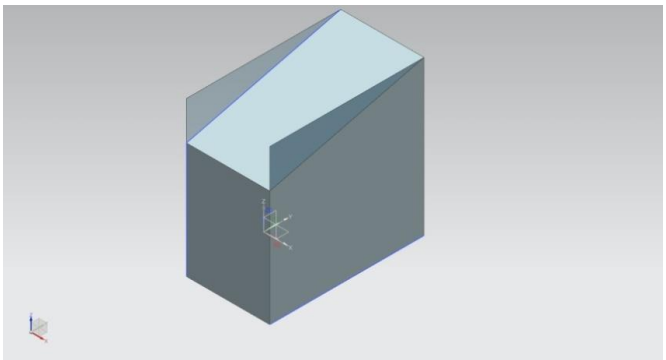

Figure 2.3.3. Work station

The work station allows the product to transport through it, semi processed or fully processed product is allowed to roll on it. This only allows spherical and cylindrical products.

2.3.4 Guide

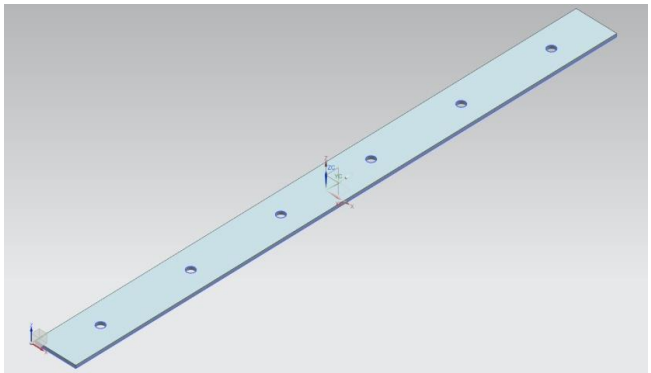

Figure 2.3.4. Guide plates

Guide is used to guide the cam follower on the cam profile, which gives a farm reciprocating motion. This guide is made up of wood and consists of six holes at equal distances.

2.3.5 Side plate

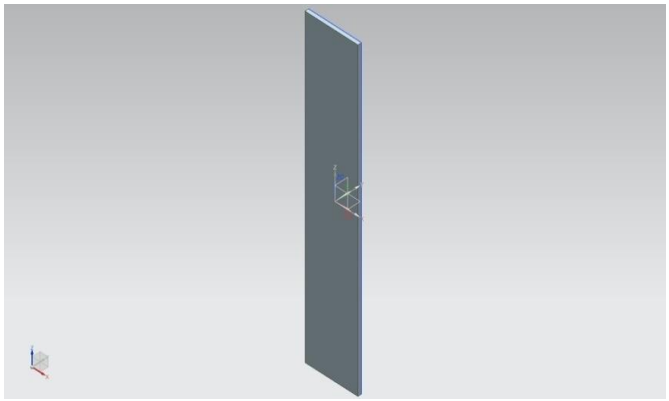

Figure 2.3.5. Side plates

Side support plate is fixed with the help of nuts and bolts to base. Main use of this side plate is to support the work station.

2.3.6 Final Assembly

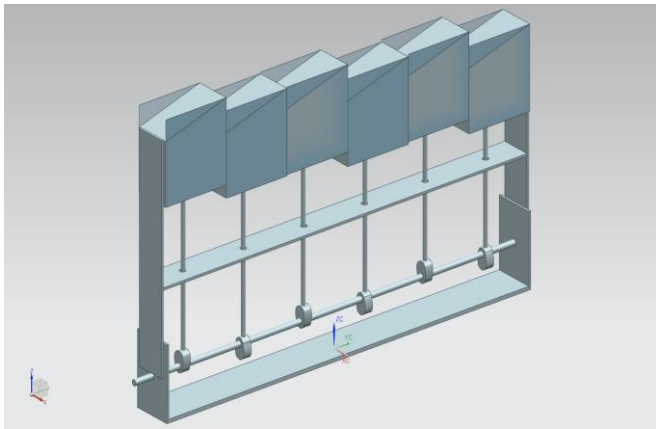

Figure 2.3.6. Final assembly

Final modelled assembly of the cam operated conveyor is as shown in the above Fig.2.3.6. Final assembly was done to the perfection as designed as modelling.

B. Fabrication

From the design and modelling we approached to the fabrication process of cam operated conveyor. This cam conveyor consists of cams, shaft, boxes, guide ways, base, side plates and vertical plates. Cams are made up of wood with 80mm base diameter 50mm lift and 25mm thickness, it works as damping in the

system which lifts and lowers the follower to the desirable height.

Shaft has been machined on the lathe and reduced the diameter of shaft from 24mm to 20mm then shaft is sent for blackening.

3.1 Shaft and cams assembly

Figure 3.1 Shaft and cams assembly

Mild steel shaft of length 1200mm and diameter 20mm is used in this conveyor with six slotted groves for fixing cams, which is placed in the bearing for free rotation.

3.2 Cam Followers

Figure 3.2. Cam followers

Mild steel pipes of 20mm diameter and different lengths such as 525, 550, 575, 600, 625 and 650mm. Which is drilled horizontally at one end and bearing of 20mm outer diameter is fixed with the aid of bolts and nuts. Holes are drilled and slots are cut in hollow pipes and then bearing is fitted for the frictionless movement on the cams.

3.3 Work Station

Figure 3.3. Work station

Work stations are made to be in contact with product physically so that material slides on it to reach its destination. Workstaation are of size 166.66 mm length, 150mm width, 115mm thick at one end and 85mm thick at another end.

3.4 Final Assembly

All the fabricated parts are assembled to the accuracy. Guide ways are used to guide the follower on the cam; it has six holes of 20mm each and length, width and thickness respectively 1200×300×12mm. Base is the strongest part of the conveyor , it is made up of mild steel material. U-frame with 12mm thickness plate of length 1200mm and width 300mm and the side metal is of 300mm width and 300mm length with 30mm thickness. Side plates are drilled hole of 20mm diameter to place the shaft.

Cams are mounted on the lubricated shaft. The shaft is fixed to the base frame with the ball bearings support for the ease of movement. Follower assembly to move on cams is placed radially in line with cams. Top end of follower assembly is connected to the workstation. The motion of Cam operated conveyor is in simple harmonic motion.

Figure 3.4. Cam operated conveyor assembly

TABLE I

LIST OF COMOPENTS IN THE CONVEYOR ASSEMBLY

Sl. No.	I. List of components		
	Component	**Material**	**Quantity**
1	Base	Mild steel	1
2	Cam	Wood	6
3	Follower	Mild steel	6
4	Work stations	Wood	6
5	Side support	Wood	2
6	Guide	Wood	1
7	Shaft	Mild steel	1
8	Nut and bolts	Mild steel	12
9	Bearings	HSS	8
10	Keys	Mild steel	6

III. RESULTS AND DISCUSSION

A Cam operated conveyor performance was tested for various parameters. Each cam movements, follower reciprocation and workstation movements were observed for various loads of spherical components.

Time required in transferring the components for various shaft speeds are noted. Slippages of the spherical components for various shaft speeds were noted. There were no slippage of spherical components were observed.

IV. CONCLUSION

It is observed that cam operated conveyor is best suitable for transferring spherical components from lower workstations to higher workstations. Simple harmonic motion is used to transfer the product. Rotation of shaft and oscillation of follower help to move the component.

The product transport in this conveyor takes place sliding and rolling over the boxes, this conveyor lift the product up to 150mm and very efficient for the spherical component. As every follower lift the component up to 25mm. Power consumption was less compare to bucket conveyor. Length to height ratio is the issue but can be cleared by keeping shaft inclined.

V. ACKNOWLEDGEMENTS

I wish my sincere gratitude to the final year students Mubashir Pervez, Sidligappa, Venugopa Goud and Dileep Kumar who involved in this work and their efforts made this idea into successful working model. Even I would like to thank technical staffs of Don Bosco Institute of Technology for the endless support.

VI. REFERENCES

[1] Snehal Patel, Sumant Patel “A Review on Design and Analysis of Bucket Elevator”, IJERA volume2 issue5.

[2] Jigar Patel “Productivity improvement of Bucket Elevator by modified design”, IJETAE volume3 issue1.

[3] T. K. Ray, “Mechanical handling of materials”, Asian books publications. 2004 pp. 92-105

[4] V.B.Bhandari “Design of Machine Element,” TataMcGraw Hill publishing company, eighth edition (2003).

[5] R.S.khurmi & J.K.gupta “Design of machine elements.”Eurasia publishing house(pvt.)Ltd,fivth edition.

[6] Fenner Dunlop “Conveyor Handbook conveyor belting,” Australia (June 2009)